Properties

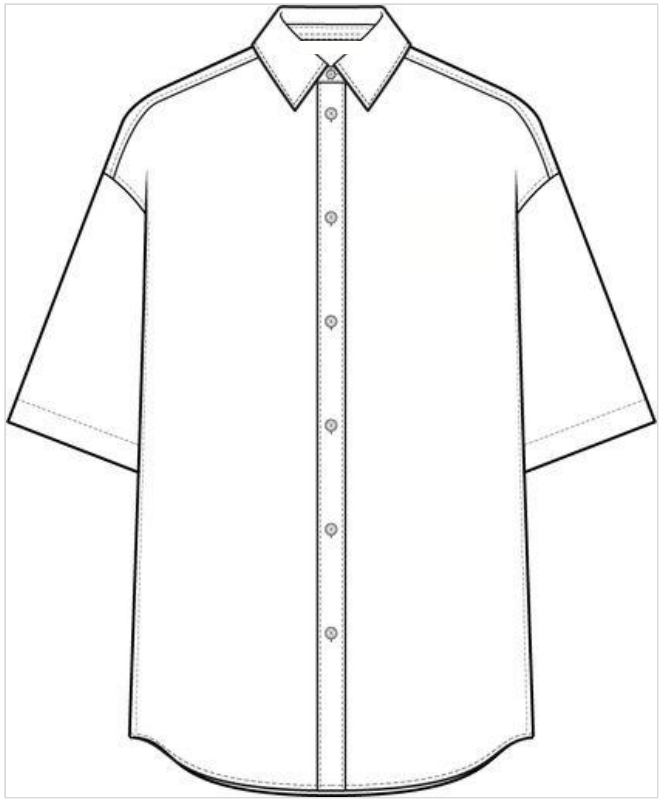

Style		**TD**	
External Style Name		**Designer**	
Season	FW25	**Pattern - Internal**	
Concept	Fashion	**Pattern - External**	
Gender	Men	**Latest Pattern Number**	
Category	Shirts	**Article Number (Style Level)**	
Description	Men's casual shirts		
PD			

Product Development Information

Wash and Treatments	AAC	**Development Stage**	

Supply Chain Information

Packaging Method	

Description	Proto 1 Launch
Stage	Proto 1

TBC for visual image, still working of photoshop.
But similar idea.

Fitting 2024-05-14
with

Please follow below comments, sketch and BOM then proceed to make

GARMENT SPECIFICATION

* Sample to be made in size 46.
* All shrinkage tests completed by supplier before fabric is cut, garment measurements to match m-list.
* BOM and sketch to be followed carefully.

PATTERN COMMENTS:

Please follow pattern for Proto 1 making.

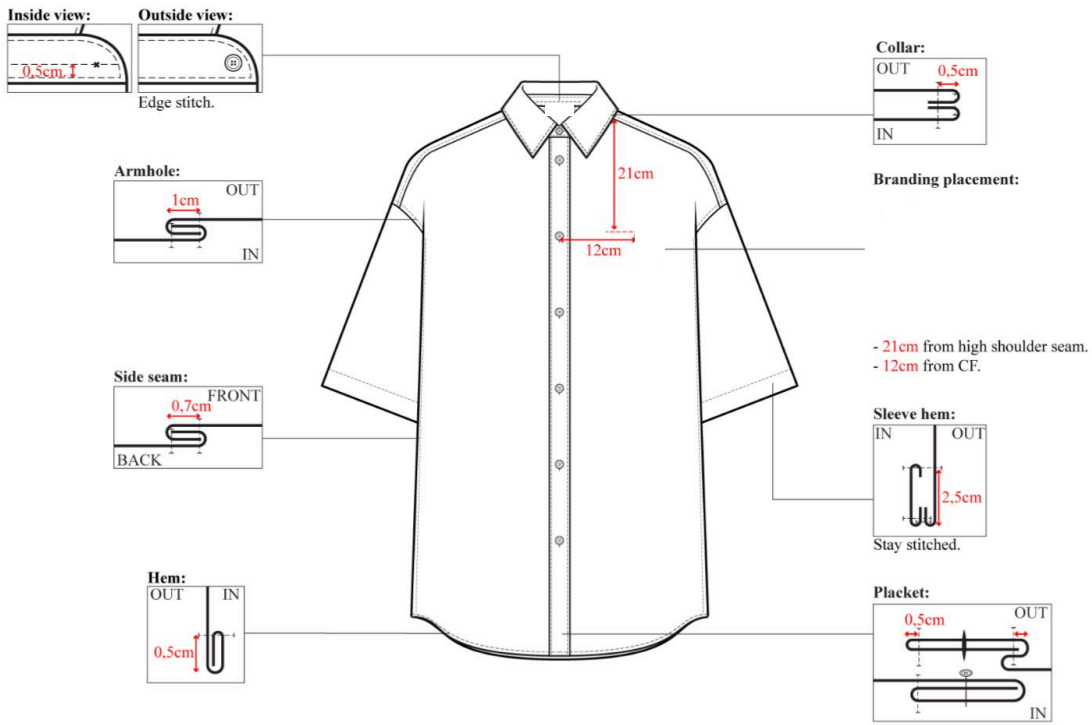

DEVELOPMENT COMMENTS:

Shell: Polopique -

Garment Treatment: Please follow as

Making:

1. Carryover block-
2. Bow embroidery on chest, in WHITE colour.
3. CF in branded MOP L18 in white.
4. Sleeve placket in branded MOP L14 in white.
5. Top stitching colour: tonal to fabric base
    - 3 stitches/ cm in T70.
6. Please make sure to use **single thread** for whole garment sewing/ stitching.
7. Follow BOM for correct trim allocation
8. Ensure all seam allowances are trimmed and even.
9. Please use light fusing compatible with shell. Fuse only under collar, interior collar stand, interior cuffs and placket. Kindly press the fusing properly.
10. Please ensure making is of . standards and internals are finished neatly and cleanly.

Please follow sketch for all the top stitching detail.

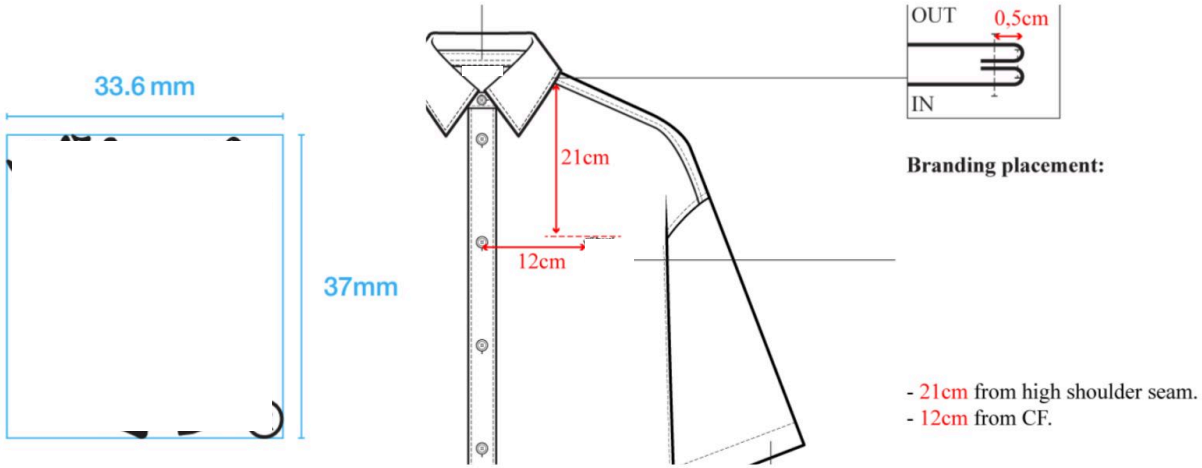

EMBROIDERY DETAILS:

- BOW Embroidery
- Size: 33.6mm
- Thread Colour: WHITE, Maderia Polyneon
- Technique: Satin Stitch Embroidery, this should be align with womenswear last season.
- Position: Please refer to sketch.

GARMENT TREATMENT DETAILS:

- Bleach Spot all over as following the photoshopped image
- Whisker as per trial
- Need all the same effect as per trial
- Please ignore the printing in the trial.

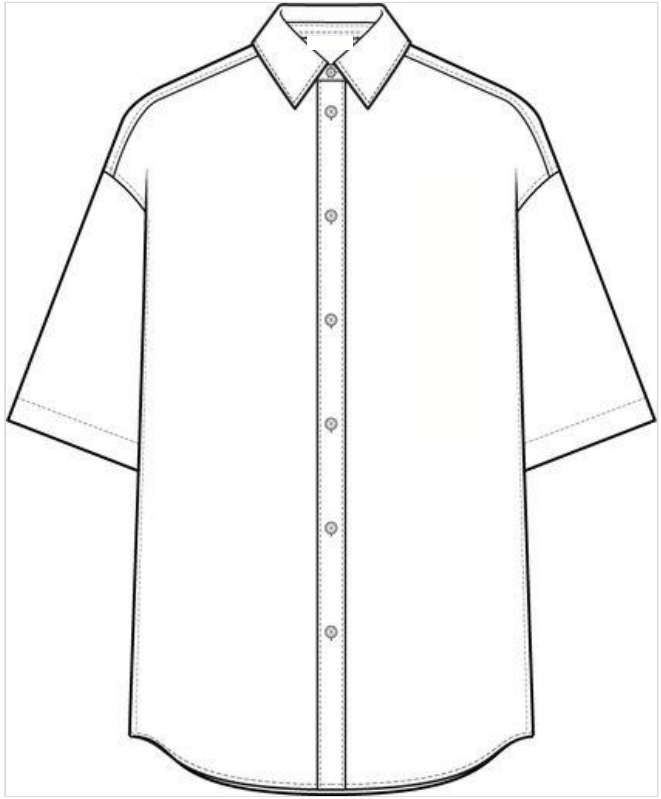

Style	
Style BOM	
Category	Shirts

PD	
External Style Name	
Stage	Proto 1

Components

Components	Positioning	Comment	Product	Material Subtype	Supplier	Supplier Article Name	Composition	Total Cost per Unit	Currency	UOM	Common Size	Width OLD	Common Qty
Fabric (1)													
Displaying 4 groups and 12 results													

Components

Components	Positioning	Comment	Product	Material Subtype	Supplier	Supplier Article Name	Composition	Total Cost per Unit	Currency	UOM	Common Size	Width OLD	Common Qty
Shell	Body												0
Wash (2)													
Garment Treatment		Spray whisker as per previous trial Follow photoshopped image for further information											0
Embroidery	position please refer to sketch	BOW embroidery on chest in WHITE 3.3cm Satin Stitching		Yarn		Madeira POLYNEON	100% Polyester			Kg			0
Trims (4)													
Trims	CF Placket x7 + 1x spare		Branded MOP Button (Lenzi - 381826)	Buttons	Bottonificio Lenzi 1955	381826	100% Mother of pearl	0,4500	EUR	Pieces	L18 (11,4mm)		8
Trims	Topstitches	THREAD T70 - Tonal to shell	THREAD 70							Meters			0
Trims	General making	THREAD T120 - Tonal to shell	THREAD 120							Meters			0
Trims	Fusing etc supplied by factory		Local trims			Local trims							0
Labels (5)													

Displaying 1 - 7 of 12 results

Components

Components	Positioning	Comment	Product	Material Subtype	Supplier	Supplier Article Name	Composition	Total Cost per Unit	Currency	UOM	Common Size	Width OLD	Common Qty
Main Label	CB as per sketch			Main Labels			100% Polyester	0,3700	HKD	Pieces			1
Size Label	As per guideline.			Size Labels			100% Polyester	0,3700	HKD	Pieces			1
Made in Label	As per guideline	** For US PO's only		Country of Origin Labels			100% Polyester	0,6000	HKD	Pieces			1
Hangtag	As per guideline.			Hangtags			100% Paper	0,5550	EUR	Pieces			1
Care Label													0

Displaying 8 - 12 of 12 results

Composition

Shell

Size Chart	PROD M-list	**Base Size**	46	**PD**	
Description		**Increment**		**Revision Comment**	
Product Group		**Pattern - Internal**		**Stage**	Proto 1
Size Range		**Pattern - External**			
Selected Sizes	42-54	**Pattern (new)**			

Dimensions

Dim	Description	Description (Alt)	Tol (-)	Tol (+)	46
CORE MEASUREMENTS					
BW003	Chest	2cm below armhole	-1,00	1,00	144,00
PO522	Front width position	from HPS	0,00	0,00	18,00
BW001	Front width		-0,25	0,25	57,50
BW008	Bottom width (measured Straight)		-1,00	1,00	138,00
LEN246	Front length (mid / hip to knee)	at CF	-0,50	0,50	72,40
LEN245	Back length (mid / hip to knee)	at CB	-0,50	0,50	83,00
BW012	Across shoulder	measured straight	-0,25	0,25	63,00
BW045	Back width	at yoke seam	0,00	0,00	62,00
LEN204	Armhole depth	at CB	0,00	0,00	38,00
NK311	Neck circumference	Button to 3/4 buttonhole	0,00	0,00	44,50
SLV417	Sleeve length from CB (short)	3 point measure	-0,25	0,25	61,50
SLV426	Sleeve length from shoulder (short)		-0,25	0,25	29,50
SLV400	Bicep	2cm below armhole	-0,25	0,25	58,90
SLV421	Sleeve bottom width (short)		-0,25	0,25	46,00
OTHER MEASUREMENTS					
STY121	Front placket width		0,00	0,00	3,50
STY105	First button from neckline		0,00	0,00	4,50

Displaying 1 - 18 of 24 results Units: CM Increment Display: Absolute

Dimensions

Dim	Description	Description (Alt)	Tol (-)	Tol (+)	46
STY106	Button spacing (vertical)		0,00	0,00	11,10
STY107	Collar point		0,00	0,00	6,90
STY108	Collar height	at CB	-0,25	0,25	5,00
STY109	Collar stand	at CB	0,00	0,00	3,50
TAKE NOTE ! THIS IS READY GARMENT MEASUREMENT AFTER WASH. SHRINKAGE HAS TO BE ADDED BY FACTORY.					
TAKE NOTE ! PLEASE ALWAYS SEND PATTERN FILES IN ORIGINAL FORMAT (MDL/ZIP FILE) AS WELL AS DXF FILE					
Displaying 19 - 24 of 24 results				Units: CM	Increment Display: Absolute

Labeled Images

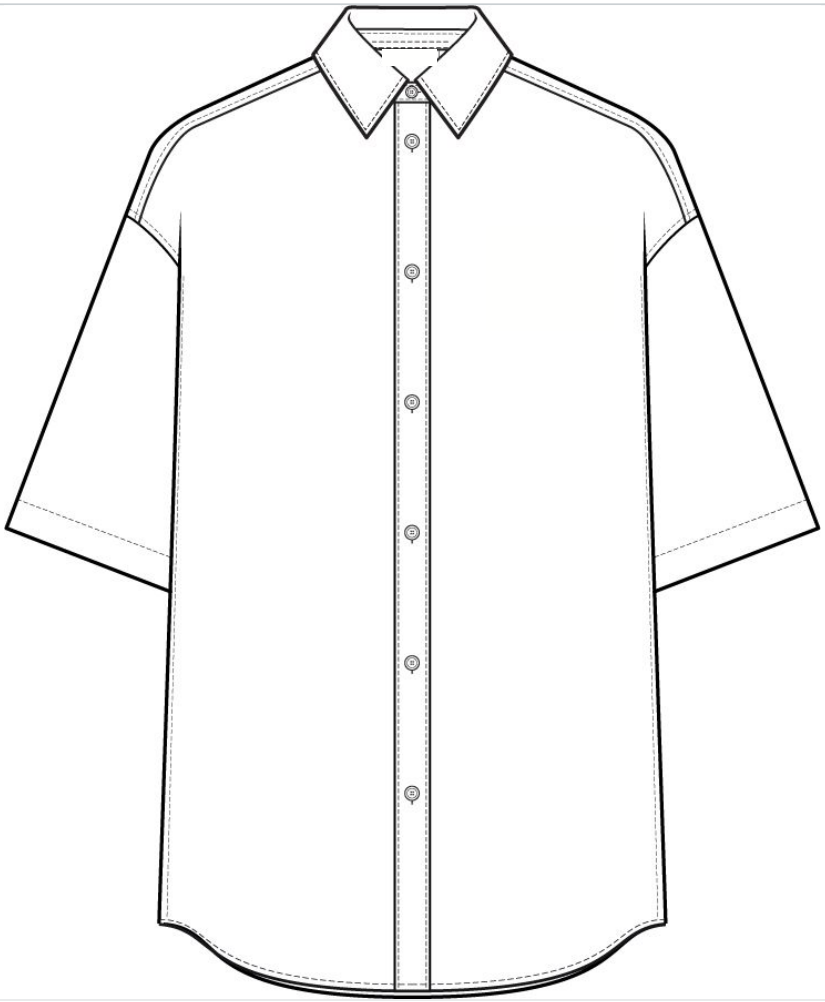

Clean view

Labeled Images

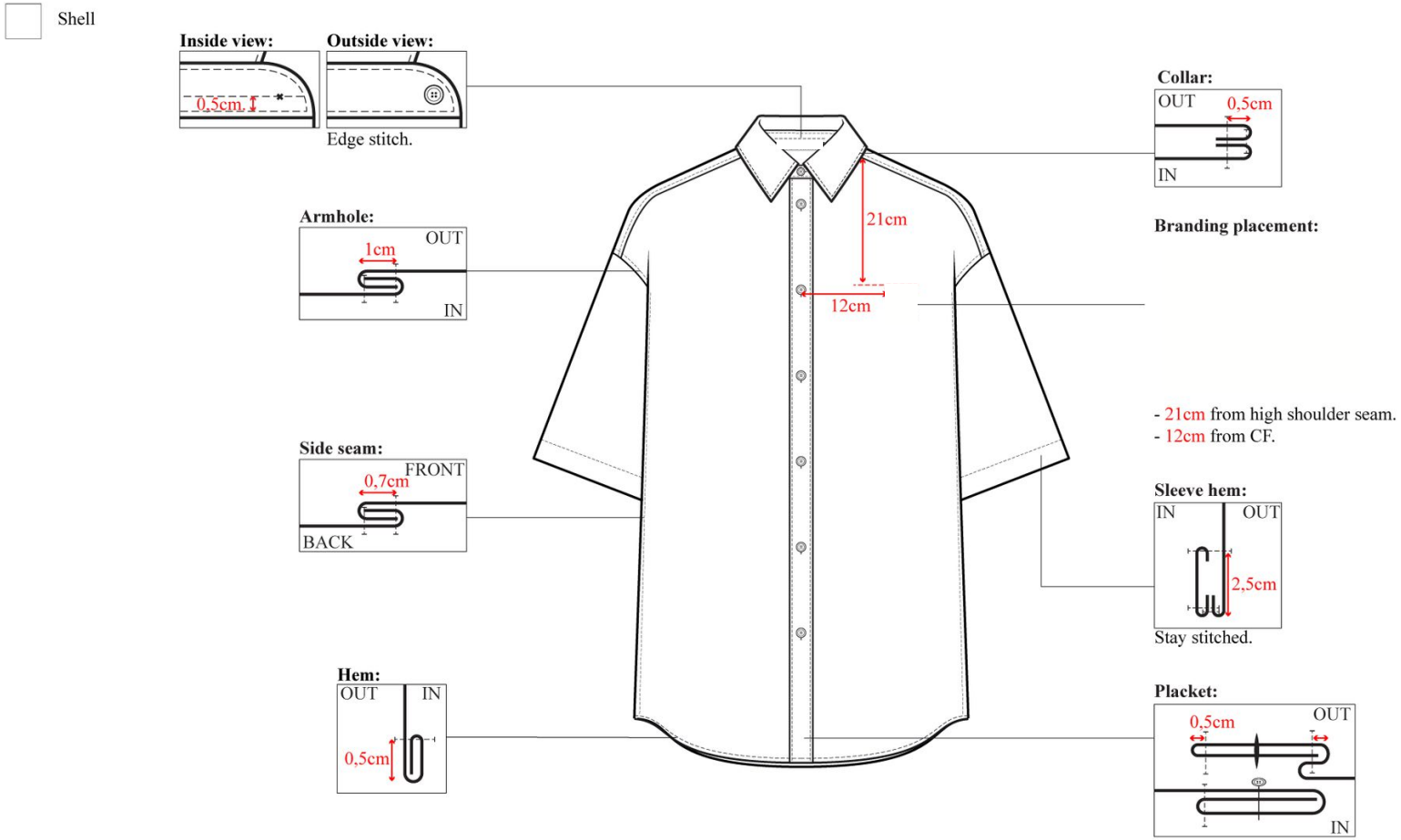

Front

Labeled Images

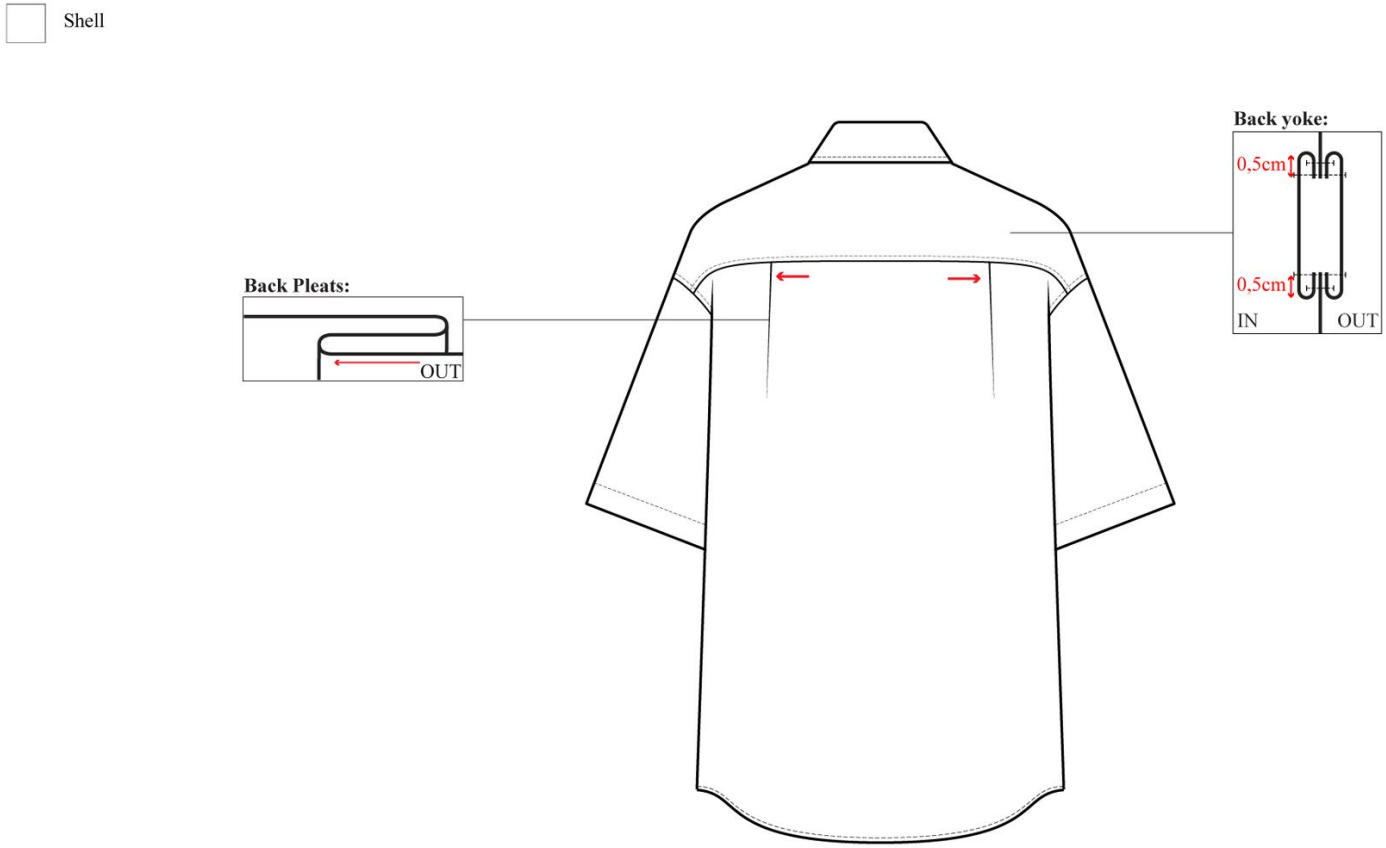

Back